US 20200160780A1

(19) United States

(12) Patent Application Publication

KIM et al.

(10) Pub. No.: US 2020/0160780 A1

(43) Pub. Date: May 21, 2020

(54) PIXEL CIRCUIT OF DISPLAY APPARATUS

(71) Applicant: **Samsung Display Co., Ltd.**, Yongin-si (KR)

(72) Inventors: **Jiwoong KIM**, Suwon-si (KR); **Ohjo KWON**, Suwon-si (KR)

(21) Appl. No.: **16/578,848**

(22) Filed: **Sep. 23, 2019**

(30) **Foreign Application Priority Data**

Nov. 21, 2018 (KR) 10-2018-014432611

Publication Classification

(51) **Int. Cl.**

G09G 3/325 (2006.01)

G09G 3/3291 (2006.01)

(52) **U.S. Cl.**

CPC ***G09G 3/325*** (2013.01); *G09G 2310/0264* (2013.01); ***G09G 3/3291*** (2013.01)

(57) **ABSTRACT**

A pixel circuit includes first to fifth transistors, an organic light emitting element, and a capacitor. The second transistor includes a control electrode receiving a first scan signal, an input electrode receiving a data voltage, and an output electrode connected to the control electrode of the first transistor. The third transistor includes a control electrode receiving a second scan signal, an input electrode receiving an initialization voltage, and an output electrode connected to the output electrode of the first transistor. The fourth transistor includes a control electrode receiving an emission signal, an input electrode receiving a first power voltage, and an output electrode connected to the input electrode of the first transistor. The fifth transistor includes a control electrode receiving a third scan signal, an input electrode receiving the data voltage, and an output electrode connected to the input electrode of the first transistor.

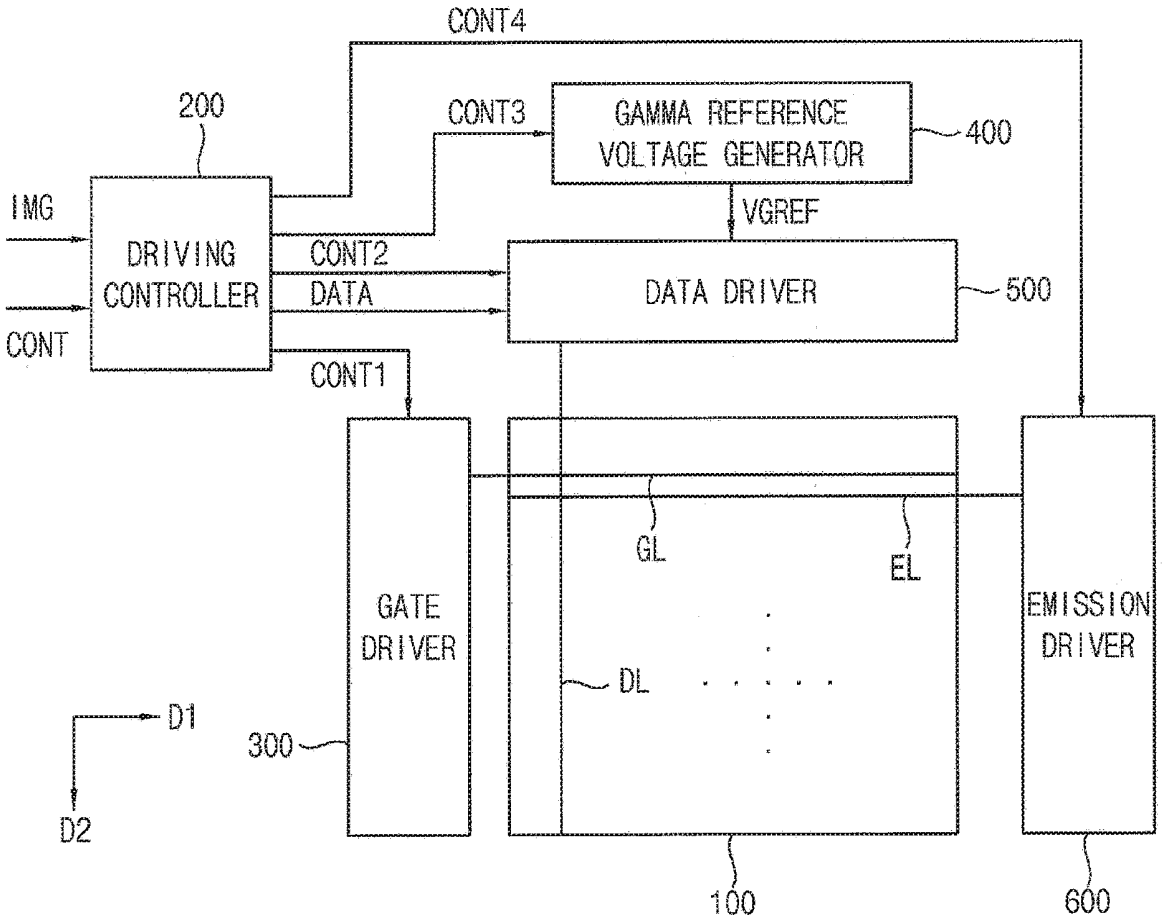

FIG. 1

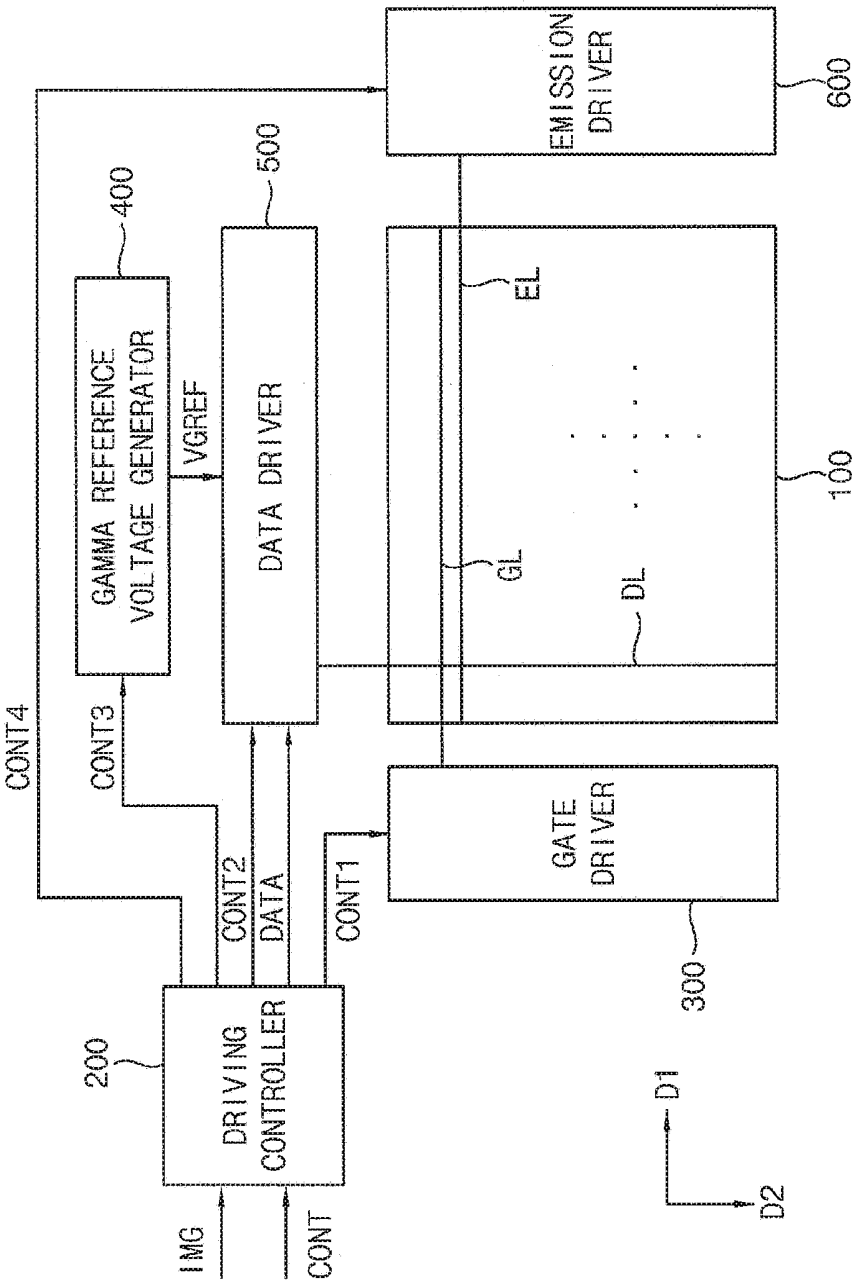
IMG
CONT
200
DRIVING CONTROLLER
CONT4
CONT3
CONT2
DATA
CONT1
400
GAMMA REFERENCE VOLTAGE GENERATOR
VGREF
500
DATA DRIVER
EL
GL
DL
100
GATE DRIVER
300
EMISSION DRIVER
600
D1
D2

FIG. 2

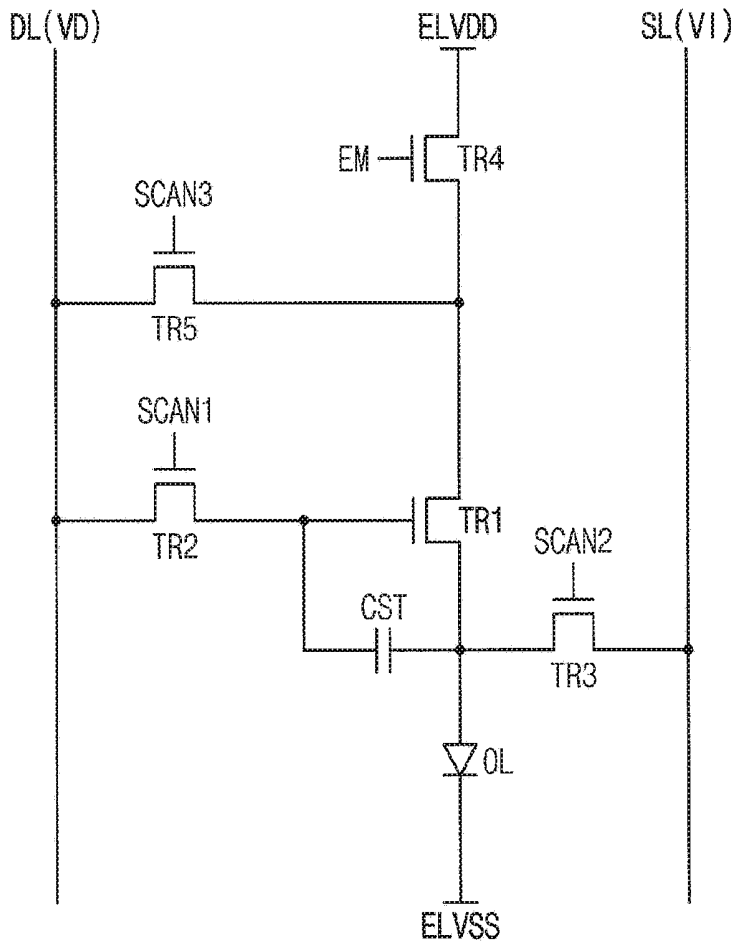
DL(VD)
ELVDD
SL(VI)
EM
TR4
SCAN3
TR5
SCAN1
TR2
TR1
SCAN2
CST
TR3
OL
ELVSS

FIG. 3A

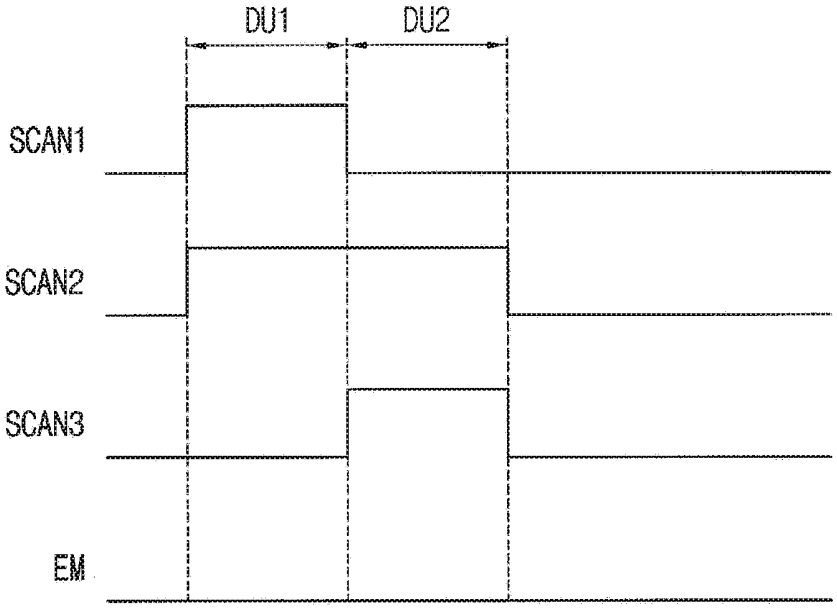

FIG. 3B

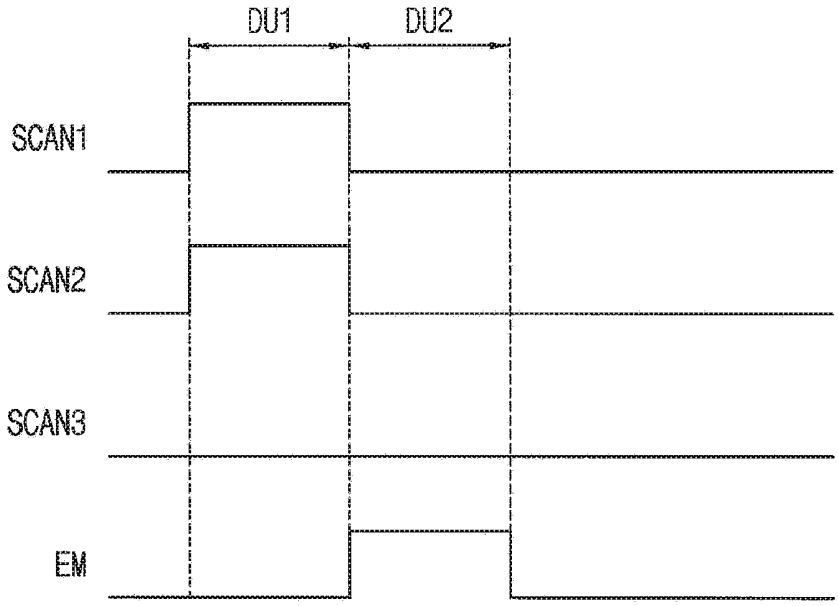

FIG. 4

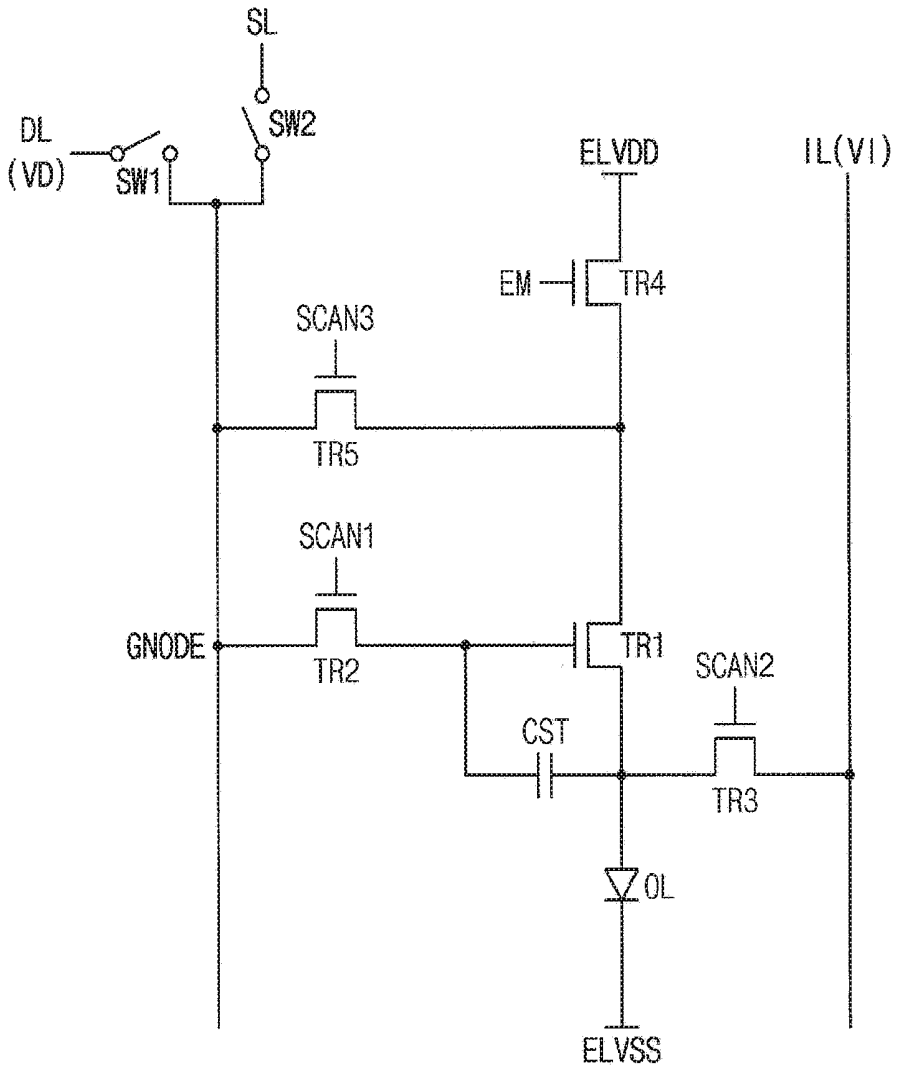
SL
SW2
DL
(VD)
SW1
ELVDD
IL(VI)
EM
TR4
SCAN3
TR5
SCAN1
GNODE
TR2
TR1
SCAN2
CST
TR3
OL
ELVSS

FIG. 5

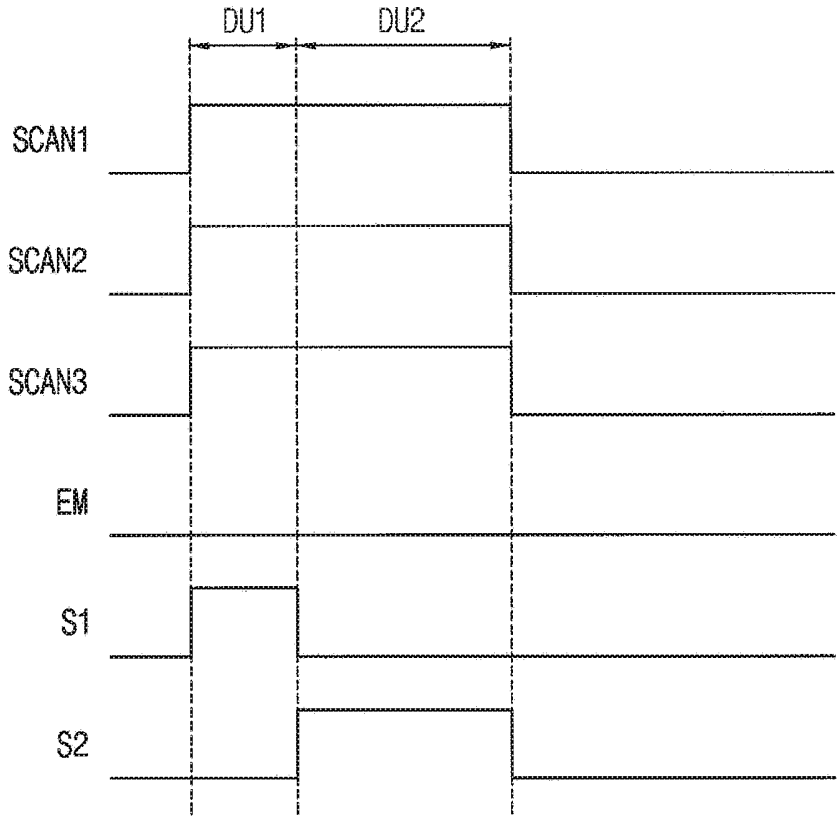
DU1
DU2
SCAN1
SCAN2
SCAN3
EM
S1
S2

FIG. 6

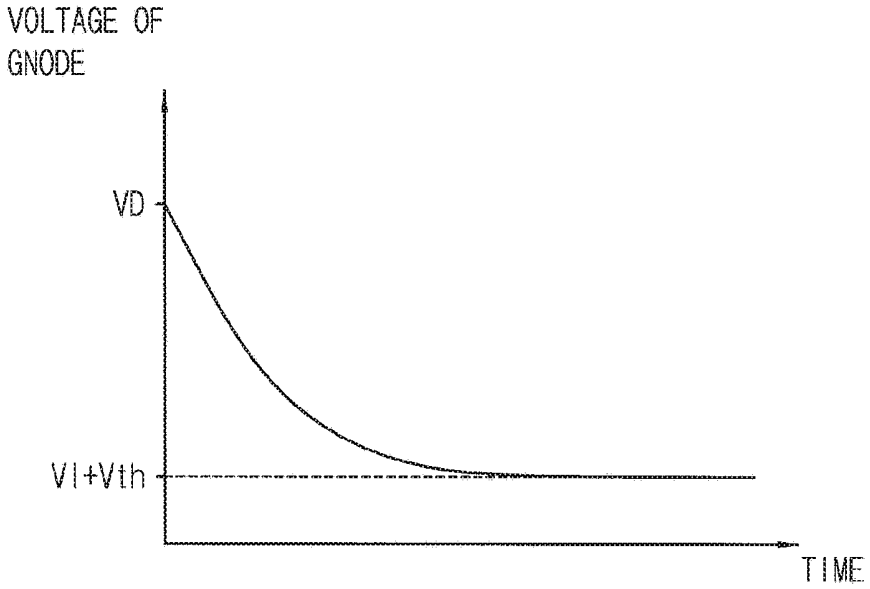
VOLTAGE OF GNODE
VD
VI+Vth
TIME

FIG. 7

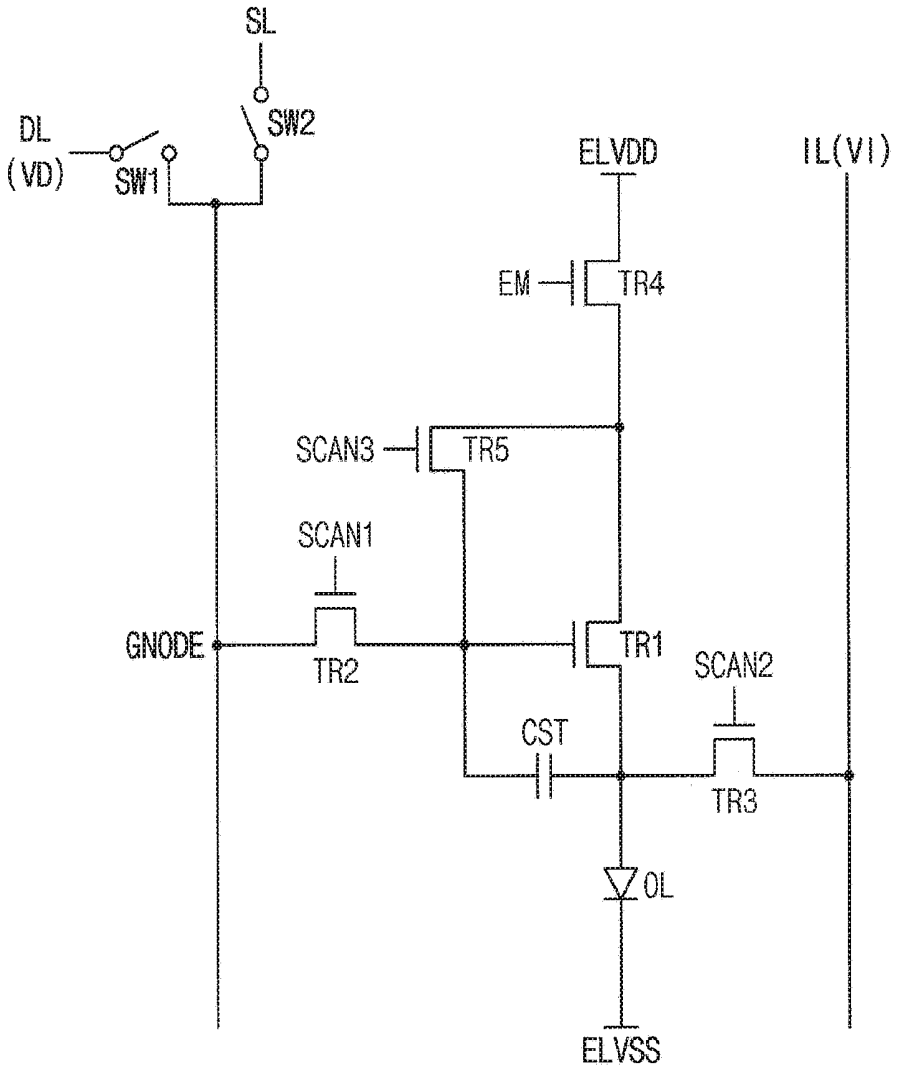
SL
SW2
DL
(VD)
SW1
ELVDD
IL(VI)
EM
TR4
SCAN3
TR5
SCAN1
GNODE
TR2
TR1
SCAN2
CST
TR3
OL
ELVSS

FIG. 8

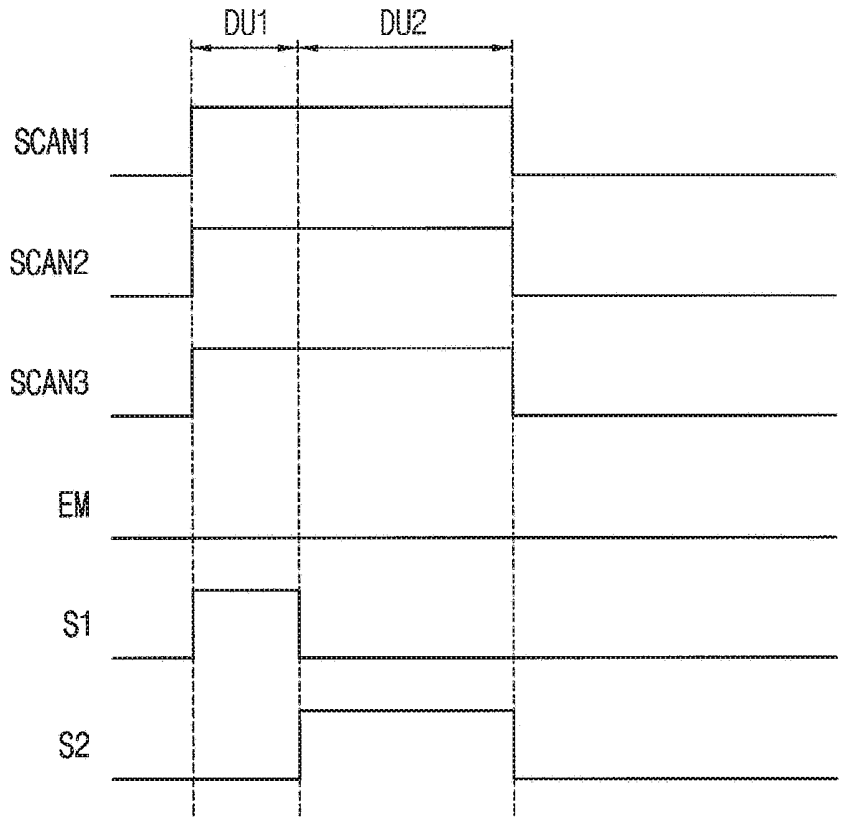

FIG. 9

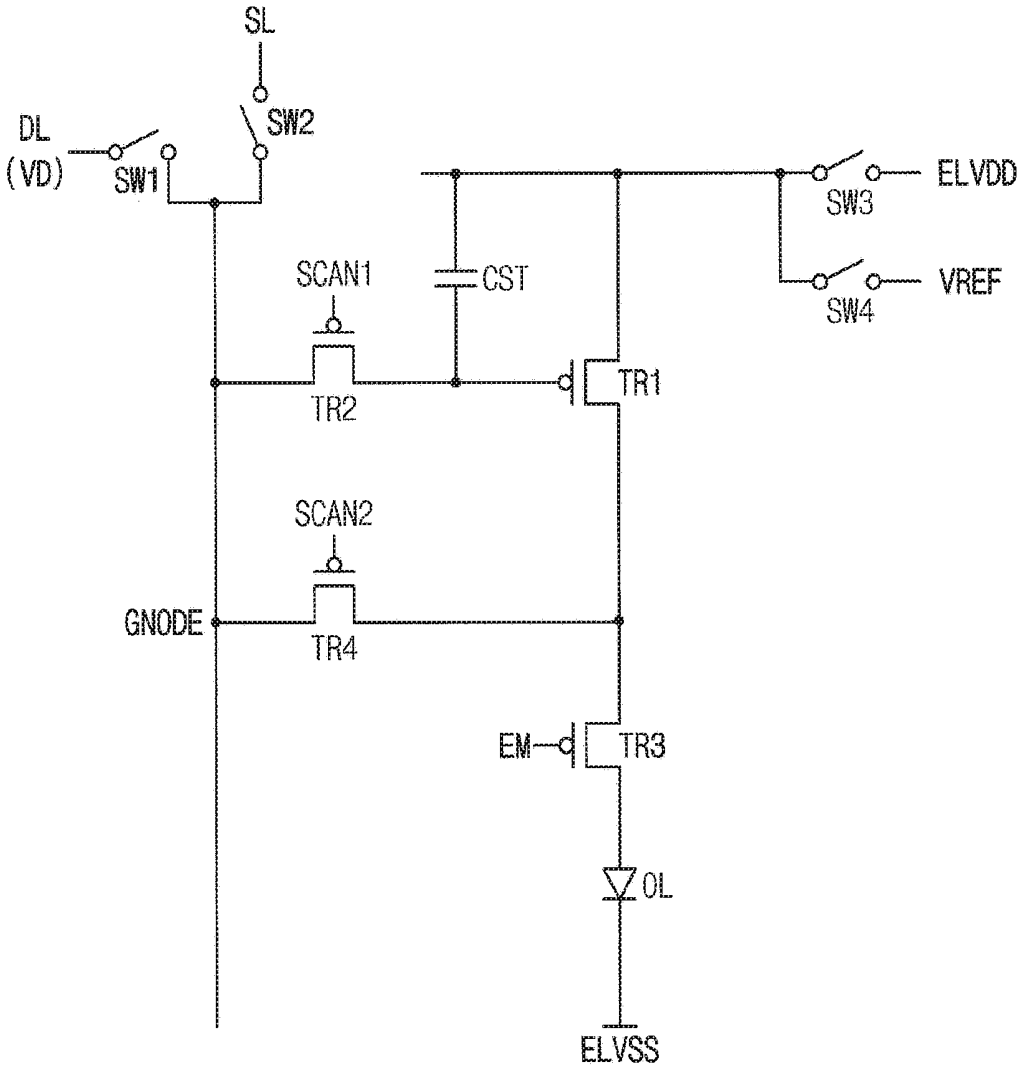
SL
SW2
DL
(VD)
SW1
ELVDD
SW3
SCAN1
CST
VREF
SW4
TR1
TR2
SCAN2
GNODE
TR4
EM
TR3
OL
ELVSS

FIG. 10

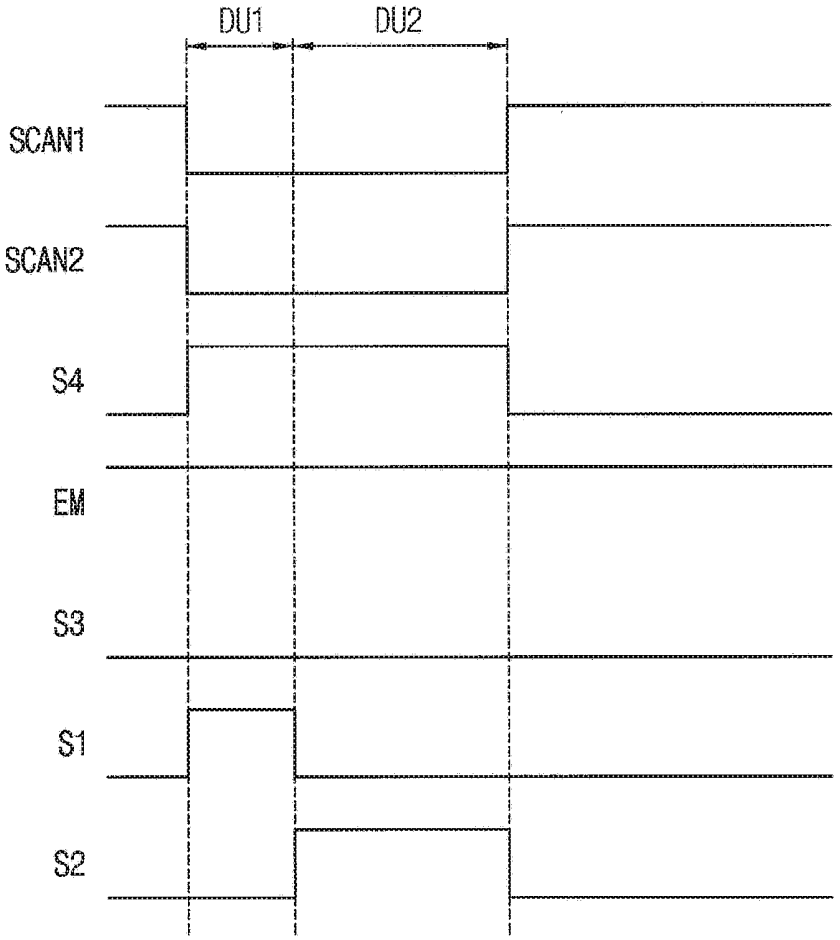

PIXEL CIRCUIT OF DISPLAY APPARATUS

CROSS-REFERENCE TO RELATED APPLICATION

[0001] This application claims priority from and the benefit of Korean Patent Application No. 10-2018-0144326, filed on Nov. 21, 2018, which is hereby incorporated by reference for all purposes as if fully set forth herein.

BACKGROUND

Field

[0002] Exemplary embodiments of the inventive concepts relate to a pixel circuit of a display apparatus, and more particularly, to a pixel circuit of a display apparatus sensing a threshold voltage of a driving switching element to enhance a display quality of a display panel.

Discussion of the Background

[0003] A display apparatus includes a display panel and a display panel driver. The display panel includes a plurality of gate lines, a plurality of data lines, a plurality of emission lines and a plurality of pixels. The display panel driver includes a gate driver, a data driver, an emission driver and a driving controller. The gate driver outputs gate signals to the gate lines. The data driver outputs data voltages to the data lines. The emission driver outputs emission signals to the emission lines. The driving controller controls the gate driver, the data driver and the emission driver.

[0004] Threshold voltages of driving switching elements in pixel circuits which vary due to process variance are required to be compensated to maintain a luminance uniformity of the display panel.

[0005] When the threshold voltages of driving switching elements in pixel circuits are not compensated, the luminance uniformity of the display panel may be reduced so that the display quality of the display panel may be deteriorated.

[0006] When elements to compensate the threshold voltages of driving switching elements are included in the pixel circuit, the number of the switching elements in the pixel circuit may increase and the manufacturing cost of the display panel may increase.

[0007] The above information disclosed in this Background section is only for understanding of the background of the inventive concepts, and, therefore, it may contain information that does not constitute prior art.

SUMMARY

[0008] Exemplary embodiments of the inventive concepts provide a pixel circuit of a display apparatus capable of sensing a threshold voltage of a driving switching element to enhance a display quality of a display panel.

[0009] Additional features of the inventive concepts will be set forth in the description which follows, and in part will be apparent from the description, or may be learned by practice of the inventive concepts.

[0010] In an exemplary embodiment of a pixel circuit of a display apparatus according to the inventive concepts, the pixel circuit includes a first switching element, a second switching element, a third switching element, a fourth switching element, a fifth switching element, an organic light emitting element and a capacitor. The first switching element includes a control electrode, an input electrode and an output electrode. The second switching element includes a control electrode to which a first scan signal is applied, an input electrode to which a data voltage is applied, and an output electrode connected to the control electrode of the first switching element. The third switching element includes a control electrode to which a second scan signal is applied, an input electrode to which an initialization voltage is applied, and an output electrode connected to the output electrode of the first switching element. The fourth switching element includes a control electrode to which an emission signal is applied, an input electrode to which a first power voltage is applied, and an output electrode connected to the input electrode of the first switching element. The fifth switching element includes a control electrode to which a third scan signal is applied, an input electrode to which the data voltage is applied, and an output electrode connected to the input electrode of the first switching element. The organic light emitting element includes a first electrode connected to the output electrode of the first switching element and a second electrode to which a second power voltage is applied. The capacitor includes a first end connected to the control electrode of the first switching element and a second end connected to the output electrode of the first switching element.

[0011] In an exemplary embodiment, the first scan signal and the second scan signal may have an activation level and the third scan signal may have a deactivation level during a first duration of a threshold voltage sensing mode. The first scan signal may have the deactivation level and the second scan signal and the third scan signal may have the activation level during a second duration of the threshold voltage sensing mode.

[0012] In an exemplary embodiment, a threshold voltage of the first switching element may be sensed using the third switching element and an initialization voltage applying line which applies the initialization voltage during the second duration of the threshold voltage sensing mode.

[0013] In an exemplary embodiment, the first scan signal and the second scan signal may have the activation level and the third scan signal may have the deactivation level during a first duration of a display mode. The first scan signal, the second scan signal and the third scan signal may have the deactivation level and the emission signal may have the activation level during a second duration of the display mode.

[0014] In an exemplary embodiment, the pixel circuit may further include a first switch connecting the input electrode of the second switching element and a data line and a second switch connecting the input electrode of the second switching element and a sensing line.

[0015] In an exemplary embodiment, the first scan signal, the second scan signal and the third scan signal, a control signal of the first switch may have an activation level and a control signal of the second switch may have a deactivation level during a first duration of a threshold voltage sensing mode. The first scan signal, the second scan signal, the third scan signal and the control signal of the second switch may have the activation level and the control signal of the first switch may have the deactivation level during a second duration of the threshold voltage sensing mode.

[0016] In an exemplary embodiment, a length of the second duration of the threshold voltage sensing mode may be longer than a length of the first duration of the threshold voltage sensing mode.

[0017] In an exemplary embodiment, a threshold voltage of the first switching element may be sensed based on a voltage of the input electrode of the second switching element using the second switch and the sensing line during the second duration of the threshold voltage sensing mode.

[0018] In an exemplary embodiment, the first scan signal, the second scan signal and the control signal of the first switch may have the activation level and the third scan signal and the control signal of the second switch may have the deactivation level during a first duration of a display mode. The first scan signal, the second scan signal, the third scan signal and the control signal of the second switch may have the deactivation level and the emission signal may have the activation level during a second duration of the display mode.

[0019] In an exemplary embodiment, the first to fifth switching elements may be N-type transistors.

[0020] In an exemplary embodiment of a pixel circuit of a display apparatus according to the inventive concepts, the pixel circuit includes a first switching element, a second switching element, a third switching element, a fourth switching element, a fifth switching element, an organic light emitting element and a capacitor. The first switching element includes a control electrode, an input electrode and an output electrode. The second switching element includes a control electrode to which a first scan signal is applied, an input electrode to which a data voltage is applied, and an output electrode connected to the control electrode of the first switching element. The third switching element includes a control electrode to which a second scan signal is applied, an input electrode to which an initialization voltage is applied, and an output electrode connected to the output electrode of the first switching element. The fourth switching element includes a control electrode to which an emission signal is applied, an input electrode to which a first power voltage is applied, and an output electrode connected to the input electrode of the first switching element. The fifth switching element includes a control electrode to which a third scan signal is applied, an input electrode connected to the input electrode of the first switching element and an output electrode connected to the control electrode of the first switching element. The organic light emitting element includes a first electrode connected to the output electrode of the first switching element and a second electrode to which a second power voltage is applied. The capacitor includes a first end connected to the control electrode of the first switching element and a second end connected to the output electrode of the first switching element.

[0021] In an exemplary embodiment, the pixel circuit may further include a first switch connecting the input electrode of the second switching element and a data line and a second switch connecting the input electrode of the second switching element and a sensing line.

[0022] In an exemplary embodiment, the first scan signal, the second scan signal and the third scan signal, a control signal of the first switch may have an activation level and a control signal of the second switch may have a deactivation level during a first duration of a threshold voltage sensing mode. The first scan signal, the second scan signal, the third scan signal and the control signal of the second switch may have the activation level and the control signal of the first switch may have the deactivation level during a second duration of the threshold voltage sensing mode.

[0023] In an exemplary embodiment, a length of the second duration of the threshold voltage sensing mode may be longer than a length of the first duration of the threshold voltage sensing mode.

[0024] In an exemplary embodiment, the first scan signal, the second scan signal and the control signal of the first switch may have the activation level and the third scan signal, the control signal of the second switch and the emission signal may have the deactivation level during a first duration of a display mode. The first scan signal, the second scan signal, the third scan signal and the control signal of the second switch may have the deactivation level and the emission signal may have the activation level during a second duration of the display mode.

[0025] In an exemplary embodiment of a pixel circuit of a display apparatus according to the inventive concepts, the pixel circuit includes a first switching element, a second switching element, a third switching element, a fourth switching element, an organic light emitting element and a capacitor. The first switching element includes a control electrode, an input electrode and an output electrode. The second switching element includes a control electrode to which a first scan signal is applied, an input electrode to which a data voltage is applied, and an output electrode connected to the control electrode of the first switching element. The third switching element includes a control electrode to which an emission signal is applied, an input electrode connected to the output electrode of the first switching element and an output electrode connected to a first electrode of an organic light emitting element. The fourth switching element includes a control electrode to which a second scan signal is applied, an input electrode to which the data voltage is applied, and an output electrode connected to the output electrode of the first switching element. The organic light emitting element includes the first electrode connected to the output electrode of the third switching element and a second electrode to which a low power voltage is applied. The capacitor includes a first end connected to the input electrode of the first switching element and a second end connected to the control electrode of the first switching element.

[0026] In an exemplary embodiment, the pixel circuit may further include a first switch connecting the input electrode of the second switching element and a data line and a second switch connecting the input electrode of the second switching element and a sensing line.

[0027] In an exemplary embodiment, the pixel circuit may further include a third switch configured to apply a high power voltage to the input electrode of the first switching element and a fourth switch configured to apply a reference voltage to the input electrode of the first switching element.

[0028] In an exemplary embodiment, the first scan signal, the second scan signal, a control signal of the first switch and a control signal of the fourth switch may have an activation level and a control signal of the second switch and a control signal of the third switch may have a deactivation level during a first duration of a threshold voltage sensing mode. The first scan signal, the second scan signal, the control signal of the second switch and the control signal of the fourth switch may have the activation level and the control signal of the first switch and the control signal of the third switch may have the deactivation level during a second duration of the threshold voltage sensing mode.

[0029] In an exemplary embodiment, the first to fourth switching elements may be P-type transistors.

[0030] According to the pixel circuit of the display apparatus, the threshold voltage of the driving switching element in the pixel circuit may be sensed and the threshold voltage of the driving switching element may be compensated. Thus, the luminance uniformity of the display panel may be enhanced so that the display quality may be enhanced.

[0031] In addition, the elements compensating the threshold voltage may not be included in the pixel circuit. The elements compensating the threshold voltage may sense the threshold voltage at an outside of the pixel circuit so that the number of the switching elements in the pixel circuit may be reduced. Thus, the manufacturing cost of the display panel may be reduced.

[0032] It is to be understood that both the foregoing general description and the following detailed description are exemplary and explanatory and are intended to provide further explanation of the invention as claimed.

BRIEF DESCRIPTION OF THE DRAWINGS

[0033] The accompanying drawings, which are included to provide a further understanding of the invention and are incorporated in and constitute a part of this specification, illustrate exemplary embodiments of the invention, and together with the description serve to explain the inventive concepts.

[0034] FIG. **1** is a block diagram illustrating a display apparatus according to an exemplary embodiment of the inventive concepts.

[0035] FIG. **2** is a circuit diagram illustrating a pixel circuit of a display panel of FIG. **1**.

[0036] FIG. **3**A is a timing diagram illustrating input signals applied to the pixel circuit of FIG. **2** in a threshold voltage sensing mode.

[0037] FIG. **3**B is a timing diagram illustrating input signals applied to the pixel circuit of FIG. **2** in a display mode.

[0038] FIG. **4** is a circuit diagram illustrating a pixel circuit of a display panel of a display apparatus according to an exemplary embodiment of the inventive concepts.

[0039] FIG. **5** is a timing diagram illustrating input signals applied to the pixel circuit of FIG. **4** in the threshold voltage sensing mode.

[0040] FIG. **6** is a graph illustrating a voltage sensed at GNODE of FIG. **4**;

[0041] FIG. **7** is a circuit diagram illustrating a pixel circuit of a display panel of a display apparatus according to an exemplary embodiment of the inventive concepts.

[0042] FIG. **8** is a timing diagram illustrating input signals applied to the pixel circuit of FIG. **7** in the threshold voltage sensing mode.

[0043] FIG. **9** is a circuit diagram illustrating a pixel circuit of a display panel of a display apparatus according to an exemplary embodiment of the inventive concepts.

[0044] FIG. **10** is a timing diagram illustrating input signals applied to the pixel circuit of FIG. **9** in the threshold voltage sensing mode.

DETAILED DESCRIPTION

[0045] In the following description, for the purposes of explanation, numerous specific details are set forth in order to provide a thorough understanding of various exemplary embodiments or implementations of the invention. As used herein "embodiments" and "implementations" are interchangeable words that are non-limiting examples of devices or methods employing one or more of the inventive concepts disclosed herein. It is apparent, however, that various exemplary embodiments may be practiced without these specific details or with one or more equivalent arrangements. In other instances, well-known structures and devices are shown in block diagram form in order to avoid unnecessarily obscuring various exemplary embodiments. Further, various exemplary embodiments may be different, but do not have to be exclusive. For example, specific shapes, configurations, and characteristics of an exemplary embodiment may be used or implemented in another exemplary embodiment without departing from the inventive concepts.

[0046] Unless otherwise specified, the illustrated exemplary embodiments are to be understood as providing exemplary features of varying detail of some ways in which the inventive concepts may be implemented in practice. Therefore, unless otherwise specified, the features, components, modules, layers, films, panels, regions, and/or aspects, etc. (hereinafter individually or collectively referred to as "elements"), of the various embodiments may be otherwise combined, separated, interchanged, and/or rearranged without departing from the inventive concepts.

[0047] The use of cross-hatching and/or shading in the accompanying drawings is generally provided to clarify boundaries between adjacent elements. As such, neither the presence nor the absence of cross-hatching or shading conveys or indicates any preference or requirement for particular materials, material properties, dimensions, proportions, commonalities between illustrated elements, and/or any other characteristic, attribute, property, etc., of the elements, unless specified. Further, in the accompanying drawings, the size and relative sizes of elements may be exaggerated for clarity and/or descriptive purposes. When an exemplary embodiment may be implemented differently, a specific process order may be performed differently from the described order. For example, two consecutively described processes may be performed substantially at the same time or performed in an order opposite to the described order. Also, like reference numerals denote like elements.

[0048] When an element, such as a layer, is referred to as being "on," "connected to," or "coupled to" another element or layer, it may be directly on, connected to, or coupled to the other element or layer or intervening elements or layers may be present. When, however, an element or layer is referred to as being "directly on," "directly connected to," or "directly coupled to" another element or layer, there are no intervening elements or layers present. To this end, the term "connected" may refer to physical, electrical, and/or fluid connection, with or without intervening elements. Further, the D1-axis, the D2-axis, and the D3-axis are not limited to three axes of a rectangular coordinate system, such as the x, y, and z-axes, and may be interpreted in a broader sense. For example, the D1-axis, the D2-axis, and the D3-axis may be perpendicular to one another, or may represent different directions that are not perpendicular to one another. For the purposes of this disclosure, "at least one of X, Y, and Z" and "at least one selected from the group consisting of X, Y, and Z" may be construed as X only, Y only, Z only, or any combination of two or more of X, Y, and Z, such as, for instance, XYZ, XYY, YZ, and ZZ. As used herein, the term

"and/or" includes any and all combinations of one or more of the associated listed items.

[0049] Although the terms "first," "second," etc. may be used herein to describe various types of elements, these elements should not be limited by these terms. These terms are used to distinguish one element from another element. Thus, a first element discussed below could be termed a second element without departing from the teachings of the disclosure.

[0050] Spatially relative terms, such as "beneath," "below," "under," "lower," "above," "upper," "over," "higher," "side" (e.g., as in "sidewall"), and the like, may be used herein for descriptive purposes, and, thereby, to describe one elements relationship to another element(s) as illustrated in the drawings. Spatially relative terms are intended to encompass different orientations of an apparatus in use, operation, and/or manufacture in addition to the orientation depicted in the drawings. For example, if the apparatus in the drawings is turned over, elements described as "below" or "beneath" other elements or features would then be oriented "above" the other elements or features. Thus, the exemplary term "below" can encompass both an orientation of above and below. Furthermore, the apparatus may be otherwise oriented (e.g., rotated 90 degrees or at other orientations), and, as such, the spatially relative descriptors used herein interpreted accordingly.

[0051] The terminology used herein is for the purpose of describing particular embodiments and is not intended to be limiting. As used herein, the singular forms, "a," "an," and "the" are intended to include the plural forms as well, unless the context clearly indicates otherwise. Moreover, the terms "comprises," "comprising," "includes," and/or "including," when used in this specification, specify the presence of stated features, integers, steps, operations, elements, components, and/or groups thereof, but do not preclude the presence or addition of one or more other features, integers, steps, operations, elements, components, and/or groups thereof. It is also noted that, as used herein, the terms "substantially," "about," and other similar terms, are used as terms of approximation and not as terms of degree, and, as such, are utilized to account for inherent deviations in measured, calculated, and/or provided values that would be recognized by one of ordinary skill in the art.

[0052] As customary in the field, some exemplary embodiments are described and illustrated in the accompanying drawings in terms of functional blocks, units, and/or modules. Those skilled in the art will appreciate that these blocks, units, and/or modules are physically implemented by electronic (or optical) circuits, such as logic circuits, discrete components, microprocessors, hard-wired circuits, memory elements, wiring connections, and the like, which may be formed using semiconductor-based fabrication techniques or other manufacturing technologies. In the case of the blocks, units, and/or modules being implemented by microprocessors or other similar hardware, they may be programmed and controlled using software (e.g., microcode) to perform various functions discussed herein and may optionally be driven by firmware and/or software. It is also contemplated that each block, unit, and/or module may be implemented by dedicated hardware, or as a combination of dedicated hardware to perform some functions and a processor (e.g., one or more programmed microprocessors and associated circuitry) to perform other functions. Also, each block, unit, and/or module of some exemplary embodiments may be physically separated into two or more interacting and discrete blocks, units, and/or modules without departing from the scope of the inventive concepts. Further, the blocks, units, and/or modules of some exemplary embodiments may be physically combined into more complex blocks, units, and/or modules without departing from the scope of the inventive concepts.

[0053] Unless otherwise defined, all terms (including technical and scientific terms) used herein have the same meaning as commonly understood by one of ordinary skill in the art to which this disclosure is a part. Terms, such as those defined in commonly used dictionaries, should be interpreted as having a meaning that is consistent with their meaning in the context of the relevant art and should not be interpreted in an idealized or overly formal sense, unless expressly so defined herein.

[0054] Hereinafter, the inventive concepts will be explained in detail with reference to the accompanying drawings.

[0055] FIG. **1** is a block diagram illustrating a display apparatus according to an exemplary embodiment of the inventive concepts.

[0056] Referring to FIG. **1**, the display apparatus includes a display panel **100** and a display panel driver. The display panel driver includes a driving controller **200**, a gate driver **300**, a gamma reference voltage generator **400**, a data driver **500**, and an emission driver **600**.

[0057] The display panel **100** has a display region on which an image is displayed and a peripheral region adjacent to the display region.

[0058] The display panel **100** includes a plurality of gate lines GL, a plurality of data lines DL, a plurality of emission lines EL, and a plurality of pixels electrically connected to the gate lines GL, the data lines DL and the emission lines EL. The gate lines GL may extend in a first direction D1, the data lines DL may extend in a second direction D2 crossing the first direction D1, and the emission lines EL may extend in the first direction D1.

[0059] The driving controller **200** receives input image data IMG and an input control signal CONT from an external apparatus (not shown). For example, the input image data IMG may include red image data, green image data, and blue image data. The input image data IMG may include white image data. The input image data IMG may include magenta image data, cyan image data, and yellow image data. The input control signal CONT may include a master clock signal and a data enable signal. The input control signal CONT may further include a vertical synchronizing signal and a horizontal synchronizing signal.

[0060] The driving controller **200** generates a first control signal CONT**1**, a second control signal CONT**2**, a third control signal CONT**3**, a fourth control signal CONT**4**, and a data signal DATA based on the input image data IMG and the input control signal CONT.

[0061] The driving controller **200** generates the first control signal CONT**1** for controlling an operation of the gate driver **300** based on the input control signal CONT, and outputs the first control signal CONT**1** to the gate driver **300**. The first control signal CONT**1** may include a vertical start signal and a gate clock signal.

[0062] The driving controller **200** generates the second control signal CONT**2** for controlling an operation of the data driver **500** based on the input control signal CONT, and outputs the second control signal CONT**2** to the data driver

500. The second control signal CONT2 may include a horizontal start signal and a load signal.

[0063] The driving controller 200 generates the data signal DATA based on the input image data IMG. The driving controller 200 outputs the data signal DATA to the data driver 500.

[0064] The driving controller 200 generates the third control signal CONT3 for controlling an operation of the gamma reference voltage generator 400 based on the input control signal CONT, and outputs the third control signal CONT3 to the gamma reference voltage generator 400.

[0065] The driving controller 200 generates the fourth control signal CONT4 for controlling an operation of the emission driver 600 based on the input control signal CONT, and outputs the fourth control signal CONT4 to the emission driver 600.

[0066] The gate driver 300 generates gate signals driving the gate lines GL in response to the first control signal CONT1 received from the driving controller 200. The gate driver 300 may sequentially output the gate signals to the gate lines GL.

[0067] The gamma reference voltage generator 400 generates a gamma reference voltage VGREF in response to the third control signal CONT3 received from the driving controller 200. The gamma reference voltage generator 400 provides the gamma reference voltage VGREF to the data driver 500. The gamma reference voltage VGREF has a value corresponding to a level of the data signal DATA.

[0068] In an exemplary embodiment, the gamma reference voltage generator 400 may be disposed in the driving controller 200, or in the data driver 500.

[0069] The data driver 500 receives the second control signal CONT2 and the data signal DATA from the driving controller 200, and receives the gamma reference voltages VGREF from the gamma reference voltage generator 400. The data driver 500 converts the data signal DATA into data voltages having an analog type using the gamma reference voltages VGREF. The data driver 500 outputs the data voltages to the data lines DL.

[0070] For example, the data driver 500 may be integrally formed with the driving controller 200 to form a timing controller embedded data driver TED.

[0071] The emission driver 600 generates emission signals to drive the emission lines EL in response to the fourth control signal CONT4 received from the driving controller 200. The emission driver 600 may output the emission signals to the emission lines EL.

[0072] FIG. 2 is a circuit diagram illustrating a pixel circuit of the display panel 100 of FIG. 1.

[0073] Referring to FIGS. 1 and 2, the display panel 100 includes a plurality of pixel circuits.

[0074] In the present exemplary embodiment, the pixel circuit includes a first switching element TR1, a second switching element TR2, a third switching element TR3, a fourth switching element TR4, a fifth switching element TR5, an organic light emitting element OL, and a capacitor CST.

[0075] The first switching element TR1 includes a control electrode, an input electrode, and an output electrode.

[0076] The second switching element TR2 includes a control electrode to which a first scan signal SCAN1 is applied, an input electrode to which a data voltage VD is applied, and an output electrode connected to the control electrode of the first switching element TR1.

[0077] The third switching element TR3 includes a control electrode to which a second scan signal SCAN2 is applied, an input electrode to which an initialization voltage VI is applied, and an output electrode connected to the output electrode of the first switching element TR1.

[0078] The fourth switching element TR4 includes a control electrode to which an emission signal EM is applied, an input electrode to which a first power voltage ELVDD is applied, and an output electrode connected to the input electrode of the first switching element TR1.

[0079] The fifth switching element TR5 includes a control electrode to which a third scan signal SCAN3 is applied, an input electrode to which the data voltage VD is applied, and an output electrode connected to the input electrode of the first switching element TR1.

[0080] The organic light emitting element OL includes a first electrode connected to the output electrode of the first switching element TR1 and a second electrode to which a second power voltage ELVSS is applied.

[0081] The capacitor CST includes a first end connected to the control electrode of the first switching element TR1 and a second end connected to the output electrode of the first switching element TR1.

[0082] In the present exemplary embodiment, the first to fifth switching elements TR1 to TR5 may be N-type transistors. For example, the first to fifth switching elements TR1 to TR5 may be oxide thin film transistors.

[0083] The first to third scan signals SCAN1 to SCAN3 may be gate signals generated by the gate driver 300. The first to third scan signals SCAN1 to SCAN3 may be outputted from the gate driver 300 to the pixel circuit through the gate line GL. The pixel circuit may be connected to three gate lines applying the first to third scan signals SCAN1 to SCAN3.

[0084] FIG. 3A is a timing diagram illustrating input signals applied to the pixel circuit of FIG. 2 in a threshold voltage sensing mode. FIG. 3B is a timing diagram illustrating input signals applied to the pixel circuit of FIG. 2 in a display mode.

[0085] Referring to FIGS. 1, 2, 3A, and 3B, a threshold voltage Vth of the first switching element TR1 may be sensed at an outside of the pixel circuit. Each sensed threshold voltage Vth of the first switching element of the pixel circuit may be stored in the driving controller 200. When the driving controller 200 generates the data signal DATA, the driving controller 200 may compensate the variance of the threshold voltages Vth of the first switching elements TR1 of the pixel circuits. The driving controller 200 may output the data signal DATA including compensation of the variance of the threshold voltages Vth to the data driver 500.

[0086] The pixel circuit may be operated in one of the threshold voltage sensing mode and the display mode. In the threshold voltage sensing mode, the threshold voltages Vth of the first switching elements TR1 of the pixel circuits of the display panel 100 are sensed. For example, a manufacturer of the display apparatus may determine the variance of the threshold voltages Vth of the first switching elements TR1 of the pixel circuits of the display panel 100 before selling the display apparatus to a user. The manufacturer may compensate the variance of the threshold voltages Vth of the first switching elements TR1 when selling the display apparatus to the user. In addition, the threshold voltages Vth of the first switching elements TR1 may be sensed to

compensate a shift of the threshold voltage Vth generated by use of the display panel **100** after the display apparatus is sold to the user. In addition, the threshold voltage Vth of the first switching element TR**1** may be sensed in real time during an operation of the display panel **100** and the data voltage VD compensating the variance of the threshold voltages Vth of the first switching elements TR**1** may be generated in real time after the display apparatus is sold to the user.

[0087] FIG. **3**A represents the operation of the pixel circuit in the threshold voltage sensing mode. During a first duration DU**1** of the threshold voltage sensing mode, the first scan signal SCAN**1**, and the second scan signal SCAN**2** may have an activation level and the third scan signal SCAN**3** may have a deactivation level. During a second duration DU**2** of the threshold voltage sensing mode, the first scan signal SCAN**1** may have the deactivation level, and the second scan signal SCAN**2** and the third scan signal SCAN**3** may have the activation level.

[0088] In the present exemplary embodiment, the first to fifth switching elements TR**1** to TR**5** may be N-type transistors so that the activation level of the first to third scan signals SCAN**1** to SCAN**3** may be a high level and the deactivation level of the first to third scan signals SCAN**1** to SCAN**3** may be a low level.

[0089] During the first duration DU**1** of the threshold voltage sensing mode, the first scan signal SCAN**1** has the activation level so that the data voltage VD is applied to the control electrode of the first switching element TR**1** through the data line DL and the second switching element TR**2**.

[0090] During the first duration DU**1** of the threshold voltage sensing mode, the second scan signal SCAN**2** has the activation level so that the initialization voltage VI is applied to the first electrode of the organic light emitting element OL through the third switching element TR**3**.

[0091] During the first duration DU**1** of the threshold voltage sensing mode, the third scan signal SCAN**3** has the deactivation level so that the fifth switching element TR**5** is turned off.

[0092] During the first duration DU**1** of the threshold voltage sensing mode, the emission signal EM has the deactivation level so that the fourth switching element TR**4** is turned off.

[0093] During the second duration DU**2** of the threshold voltage sensing mode, the threshold voltage Vth of the first switching element is sensed.

[0094] During the second duration DU**2** of the threshold voltage sensing mode, the first scan signal SCAN**1** has the deactivation level so that the second switching element TR**2** is turned off.

[0095] During the second duration DU**2** of the threshold voltage sensing mode, the first switching element TR**1** is turned on by the data voltage VD which is charged at the capacitor CST during the first duration DU**1** of the threshold voltage sensing mode.

[0096] During the second duration DU**2** of the threshold voltage sensing mode, the second scan signal SCAN**2**, and the third scan signal SCAN**3** have the activation level so that the fifth switching element TR**5** and the third switching element TR**3** are turned on. The fifth switching element TR**5**, the first switching element TR**1**, and the third switching element TR**3** form a current path.

[0097] The current flowing through the first switching element TR**1** is sensed through an initialization voltage applying line SL which outputs the initialization voltage VI. The threshold voltage Vth of the first switching element TR**1** may be determined based on the current flowing through the first switching element TR**1**. An analog front end ("AFE") which is a current sensing circuit may be connected to an end portion of the initialization voltage applying line SL.

[0098] The third scan signal SCAN**3** and the fifth switching element TR**5** may be elements to sense the threshold voltage Vth of the first switching element TR**1**.

[0099] During the second duration DU**2** of the threshold voltage sensing mode, the emission signal EM has the deactivation level so that the fourth switching element TR**4** may be turned off.

[0100] In the present exemplary embodiment, a length of the second duration DU**2** of the threshold voltage sensing mode may be substantially the same as a length of the first duration DU**1** of the threshold voltage sensing mode. Alternatively, the length of the second duration DU**2** of the threshold voltage sensing mode may be set different from the length of the first duration DU**1** of the threshold voltage sensing mode.

[0101] FIG. **3**B represents the operation of the pixel circuit in the display mode. During a first duration DU**1** of the display mode, the first scan signal SCAN**1** and the second scan signal SCAN**2** may have the activation level and the third scan signal SCAN**3** may have the deactivation level. During a second duration DU**2** of the display mode, the first scan signal SCAN**1**, the second scan signal SCAN**2**, and the third scan signal SCAN**3** may have the deactivation level and the emission signal EM may have the activation level.

[0102] In the display mode, the third scan signal SCAN**3** may maintain the deactivation level so that the fifth switching element TR**5** is not turned on.

[0103] During the first duration DU**1** of the display mode, the first scan signal SCAN**1** has the activation level so that the data voltage VD is applied to the control electrode of the first switching element TR**1** through the data line DL and the second switching element TR**2**.

[0104] During the second duration DU**2** of the display mode, the emission signal EM has the activation level so that the fourth switching element TR**4** is turned on. In addition, during the second duration DU**2** of the display mode, the first switching element TR**1** is turned on by the data voltage VD which is charged at the capacitor CST during the first duration DU**1** of the display mode.

[0105] During the second duration DU**2** of the display mode, the fourth switching element TR**4** and the first switching element TR**1** are turned on so that the organic light emitting element OL emits light.

[0106] During the second duration DU**2** of the display mode, the first to third scan signals SCAN**1** to SCAN**3** have the deactivation level so that the second switching element TR**2**, the third switching element TR**3**, and the fifth switching element TR**5** are turned off.

[0107] According to the present exemplary embodiment, the threshold voltage Vth of the driving switching element TR**1** in the pixel circuit may be sensed and the threshold voltage Vth of the driving switching element TR**1** may be compensated. Thus, the luminance uniformity of the display panel **100** may be enhanced so that the display quality may be enhanced.

[0108] In addition, the elements compensating the threshold voltage Vth may not be included in the pixel circuit. The elements compensating the threshold voltage Vth may sense

the threshold voltage Vth at a location outside of the pixel circuit so that the number of the switching elements in the pixel circuit may be reduced. Thus, the manufacturing cost of the display panel **100** may be reduced.

[0109] FIG. **4** is a circuit diagram illustrating a pixel circuit of a display panel **100** of a display apparatus according to an exemplary embodiment of the inventive concepts. FIG. **5** is a timing diagram illustrating input signals applied to the pixel circuit of FIG. **4** in the threshold voltage sensing mode. FIG. **6** is a graph illustrating a voltage sensed at GNODE of FIG. **4**.

[0110] The display apparatus according to this exemplary embodiment is substantially the same as the display apparatus of the previous exemplary embodiment explained referring to FIGS. **1**, **2**, **3**A, and **3**B except for the structure of the pixel circuit of the display panel and the input signal applied to the pixel circuit. Thus, the same reference numerals will be used to refer to the same or like parts as those described in the previous exemplary embodiment of FIGS. **1**, **2**, **3**A, and **3**B and any repetitive explanation concerning the above elements will be omitted.

[0111] Referring to FIGS. **1**, **4**, **5**, and **6**, the display apparatus includes a display panel **100** and a display panel driver. The display panel driver includes a driving controller **200**, a gate driver **300**, a gamma reference voltage generator **400**, a data driver **500** and an emission driver **600**.

[0112] The display panel **100** includes a plurality of pixel circuits.

[0113] In the present exemplary embodiment, the pixel circuit includes a first switching element TR**1**, a second switching element TR**2**, a third switching element TR**3**, a fourth switching element TR**4**, a fifth switching element TR**5**, an organic light emitting element OL, and a capacitor CST.

[0114] The first switching element TR**1** includes a control electrode, an input electrode, and an output electrode.

[0115] The second switching element TR**2** includes a control electrode to which a first scan signal SCAN**1** is applied, an input electrode to which a data voltage VD is applied, and an output electrode connected to the control electrode of the first switching element TR**1**.

[0116] The third switching element TR**3** includes a control electrode to which a second scan signal SCAN**2** is applied, an input electrode to which an initialization voltage VI is applied, and an output electrode connected to the output electrode of the first switching element TR**1**.

[0117] The fourth switching element TR**4** includes a control electrode to which an emission signal EM is applied, an input electrode to which a first power voltage ELVDD is applied, and an output electrode connected to the input electrode of the first switching element TR**1**.

[0118] The fifth switching element TR**5** includes a control electrode to which a third scan signal SCAN**3** is applied, an input electrode to which the data voltage VD is applied, and an output electrode connected to the input electrode of the first switching element TR**1**.

[0119] The organic light emitting element OL includes a first electrode connected to the output electrode of the first switching element TR**1** and a second electrode to which a second power voltage ELVSS is applied.

[0120] The capacitor CST includes a first end connected to the control electrode of the first switching element TR**1** and a second end connected to the output electrode of the first switching element TR**1**.

[0121] In the present exemplary embodiment, the first to fifth switching elements TR**1** to TR**5** may be N-type transistors. For example, the first to fifth switching elements TR**1** to TR**5** may be oxide thin film transistors.

[0122] The pixel circuit may further include a first switch SW**1** connecting the input electrode of the second switching element TR**2** and the data line DL, and a second switch SW**2** connecting the input electrode of the second switching element TR**2** and a sensing line SL.

[0123] In the present exemplary embodiment, the initialization voltage VI may be applied through an initialization line IL. For example, the sensing line SL and the initialization line IL may be independently formed.

[0124] The pixel circuit may be operated in one of the threshold voltage sensing mode and the display mode.

[0125] During a first duration DU**1** of the threshold voltage sensing mode, the first scan signal SCAN**1**, the second scan signal SCAN**2**, the third scan signal SCAN**3**, and a control signal S**1** of the first switch SW**1** may have an activation level and a control signal S**2** of the second switch SW**2** may have a deactivation level. During a second duration DU**2** of the threshold voltage sensing mode, the first scan signal SCAN**1**, the second scan signal SCAN**2**, the third scan signal SCAN**3**, and the control signal S**2** of the second switch SW**2** may have the activation level and the control signal S**1** of the first switch SW**1** may have the deactivation level.

[0126] In the present exemplary embodiment, the first to fifth switching elements TR**1** to TR**5** may be N-type transistors so that the activation level of the first to third scan signals SCAN**1** to SCAN**3** may be a high level and the deactivation level of the first to third scan signals SCAN**1** to SCAN**3** may be a low level.

[0127] For example, the activation level of the control signal of the first switch SW**1** and the control signal of the second switch SW**2** may be the high level and the deactivation level of the control signal of the first switch SW**1** and the control signal of the second switch SW**2** may be the low level.

[0128] In the present exemplary embodiment, during the first duration DU**1** and the second duration DU**2** of the threshold voltage sensing mode, all of the first to third scan signals SCAN**1** to SCAN**3** may have the activation level. During the first duration DU**1** of the threshold voltage sensing mode, the data line DL applies the data voltage VD to the input electrode of the second switching element TR**2** through the first switch SW**1**. During the second duration DU**2** of the threshold voltage sensing mode, the sensing line SL is connected to the input electrode of the second switching element TR**2** to sense the threshold voltage Vth of the first switching element TR**1** through the sensing line SL.

[0129] In the present exemplary embodiment, during the second duration DU**2** of the threshold voltage sensing mode, the threshold voltage Vth of the first switching element TR**1** may be sensed based on the voltage of the input electrode GNODE of the second switching element TR**2** using the second switch SW**2** and the sensing line SL.

[0130] When the second duration DU**2** of the threshold voltage sensing mode starts, the voltage of the input electrode GNODE of the second switching element TR**2** gradually decrease from a level of the data voltage VD and is converged to a level of a sum of the initialization voltage VI and the threshold voltage Vth of the first switching element TR**1**.

[0131] In the present exemplary embodiment, the length of the second duration DU**2** of the threshold voltage sensing mode may be longer than the length of the first duration DU**1** of the threshold voltage sensing mode. A sufficient time for the voltage of the input electrode GNODE of the second switching element TR**2** to be converged to the level of the sum of the initialization voltage VI and the threshold voltage Vth of the first switching element TR**1** is needed in the second duration DU**2** of the threshold voltage sensing mode so that the second duration DU**2** of the threshold voltage sensing mode may be set longer than the first duration DU**1** of the threshold voltage sensing mode.

[0132] The third scan signal SCAN**3**, the fifth switching element TR**5** and the second switch SW**2** may be elements to sense the threshold voltage Vth of the first switching element TR**1**.

[0133] In the display mode, the third scan signal SCAN**3** and the control signal S**2** of the second switch SW**2** may maintain the deactivation level.

[0134] During a first duration of the display mode, the first scan signal SCAN**1**, the second scan signal SCAN**2**, and the control signal S**1** of the first switch SW**1** may have the activation level and the third scan signal SCAN**3**, the control signal S**2** of the second switch SW**2**, and the emission signal EM may have the deactivation level.

[0135] During a second duration of the display mode, the first scan signal SCAN**1**, the second scan signal SCAN**2**, the third scan signal SCAN**3**, and the control signal S**2** of the second switch SW**2** may have the deactivation level and the emission signal EM may have the activation level.

[0136] According to the present exemplary embodiment, the threshold voltage Vth of the driving switching element TR**1** in the pixel circuit may be sensed and the threshold voltage Vth of the driving switching element TR**1** may be compensated. Thus, the luminance uniformity of the display panel **100** may be enhanced so that the display quality may be enhanced.

[0137] In addition, the elements compensating the threshold voltage Vth may not be included in the pixel circuit. The elements compensating the threshold voltage Vth may sense the threshold voltage Vth at an outside of the pixel circuit so that the number of the switching elements in the pixel circuit may be reduced. Thus, the manufacturing cost of the display panel **100** may be reduced.

[0138] FIG. **7** is a circuit diagram illustrating a pixel circuit of a display panel **100** of a display apparatus according to an exemplary embodiment of the inventive concepts. FIG. **8** is a timing diagram illustrating input signals applied to the pixel circuit of FIG. **7** in the threshold voltage sensing mode.

[0139] The display apparatus according to the present exemplary embodiment is substantially the same as the display apparatus of the previous exemplary embodiment explained referring to FIGS. **4**, **5**, and **6** except for the connection of the fifth switching element and the other elements. Thus, the same reference numerals will be used to refer to the same or like parts as those described in the previous exemplary embodiment of FIGS. **4**, **5**, and **6** and any repetitive explanation concerning the above elements will be omitted.

[0140] Referring to FIGS. **1**, **6**, **7**, and **8**, the display apparatus includes a display panel **100** and a display panel driver. The display panel driver includes a driving controller **200**, a gate driver **300**, a gamma reference voltage generator **400**, a data driver **500**, and an emission driver **600**.

[0141] The display panel **100** includes a plurality of pixel circuits.

[0142] In the present exemplary embodiment, the pixel circuit includes a first switching element TR**1**, a second switching element TR**2**, a third switching element TR**3**, a fourth switching element TR**4**, a fifth switching element TR**5**, an organic light emitting element OL, and a capacitor CST.

[0143] The first switching element TR**1** includes a control electrode, an input electrode, and an output electrode.

[0144] The second switching element TR**2** includes a control electrode to which a first scan signal SCAN**1** is applied, an input electrode to which a data voltage VD is applied, and an output electrode connected to the control electrode of the first switching element TR**1**.

[0145] The third switching element TR**3** includes a control electrode to which a second scan signal SCAN**2** is applied, an input electrode to which an initialization voltage VI is applied, and an output electrode connected to the output electrode of the first switching element TR**1**.

[0146] The fourth switching element TR**4** includes a control electrode to which an emission signal EM is applied, an input electrode to which a first power voltage ELVDD is applied, and an output electrode connected to the input electrode of the first switching element TR**1**.

[0147] The fifth switching element TR**5** includes a control electrode to which a third scan signal SCAN**3** is applied, an input electrode connected to the input electrode of the first switching element TR**1**, and an output electrode connected to the control electrode of the first switching element TR**1**.

[0148] The organic light emitting element OL includes a first electrode connected to the output electrode of the first switching element TR**1** and a second electrode to which a second power voltage ELVSS is applied.

[0149] The capacitor CST includes a first end connected to the control electrode of the first switching element TR**1** and a second end connected to the output electrode of the first switching element TR**1**.

[0150] In the present exemplary embodiment, the first to fifth switching elements TR**1** to TR**5** may be N-type transistors. For example, the first to fifth switching elements TR**1** to TR**5** may be oxide thin film transistor.

[0151] The pixel circuit may further include a first switch SW**1** connecting the input electrode of the second switching element TR**2** and the data line DL and a second switch SW**2** connecting the input electrode of the second switching element TR**2** and a sensing line SL.

[0152] In the present exemplary embodiment, the initialization voltage VI may be applied through an initialization line IL. For example, the sensing line SL and the initialization line IL may be independently formed.

[0153] The pixel circuit may be operated in one of the threshold voltage sensing mode and the display mode.

[0154] During a first duration DU**1** of the threshold voltage sensing mode, the first scan signal SCAN**1**, the second scan signal SCAN**2**, the third scan signal SCAN**3**, and a control signal S**1** of the first switch SW**1** may have an activation level and a control signal S**2** of the second switch SW**2** may have a deactivation level. During a second duration DU**2** of the threshold voltage sensing mode, the first scan signal SCAN**1**, the second scan signal SCAN**2**, the third scan signal SCAN**3**, and the control signal S**2** of the

second switch SW2 may have the activation level and the control signal S1 of the first switch SW1 may have the deactivation level.

[0155] In the present exemplary embodiment, during the first duration DU1 and the second duration DU2 of the threshold voltage sensing mode, all of the first to third scan signals SCAN1 to SCAN3 may have the activation level. During the first duration DU1 of the threshold voltage sensing mode, the data line DL applies the data voltage VD to the input electrode of the second switching element TR2 through the first switch SW1. During the second duration DU2 of the threshold voltage sensing mode, the sensing line SL is connected to the input electrode of the second switching element TR2 to sense the threshold voltage Vth of the first switching element TR1 through the sensing line SL.

[0156] In the present exemplary embodiment, during the second duration DU2 of the threshold voltage sensing mode, the threshold voltage Vth of the first switching element TR1 may be sensed based on the voltage of the input electrode GNODE of the second switching element TR2 using the second switch SW2 and the sensing line SL.

[0157] In the present exemplary embodiment, the length of the second duration DU2 of the threshold voltage sensing mode may be longer than the length of the first duration DU1 of the threshold voltage sensing mode.

[0158] The third scan signal SCAN3, the fifth switching element TR5 and the second switch SW2 may be elements to sense the threshold voltage Vth of the first switching element TR1.

[0159] In the display mode, the third scan signal SCAN3 and the control signal S2 of the second switch SW2 may maintain the deactivation level.

[0160] During a first duration of the display mode, the first scan signal SCAN1, the second scan signal SCAN2, and the control signal S1 of the first switch SW1 may have the activation level and the third scan signal SCAN3, the control signal S2 of the second switch SW2, and the emission signal EM may have the deactivation level.

[0161] During a second duration of the display mode, the first scan signal SCAN1, the second scan signal SCAN2, the third scan signal SCAN3, and the control signal S2 of the second switch SW2 may have the deactivation level and the emission signal EM may have the activation level.

[0162] According to the present exemplary embodiment, the threshold voltage Vth of the driving switching element TR1 in the pixel circuit may be sensed and the threshold voltage Vth of the driving switching element TR1 may be compensated. Thus, the luminance uniformity of the display panel **100** may be enhanced so that the display quality may be enhanced.

[0163] In addition, the elements compensating the threshold voltage Vth may not be included in the pixel circuit. The elements compensating the threshold voltage Vth may sense the threshold voltage Vth at an outside of the pixel circuit so that the number of the switching elements in the pixel circuit may be reduced. Thus, the manufacturing cost of the display panel **100** may be reduced.

[0164] FIG. **9** is a circuit diagram illustrating a pixel circuit of a display panel **100** of a display apparatus according to an exemplary embodiment of the inventive concepts. FIG. **10** is a timing diagram illustrating input signals applied to the pixel circuit of FIG. **9** in the threshold voltage sensing mode.

[0165] The display apparatus according to the present exemplary embodiment is substantially the same as the display apparatus of the previous exemplary embodiment explained referring to FIGS. **1**, **2**, **3**A, and **3**B except for the structure of the pixel circuit of the display panel and the input signal applied to the pixel circuit. Thus, the same reference numerals will be used to refer to the same or like parts as those described in the previous exemplary embodiment of FIGS. **1**, **2**, **3**A, and **3**B and any repetitive explanation concerning the above elements will be omitted.

[0166] Referring to FIGS. **1**, **9** and **10**, the display apparatus includes a display panel **100** and a display panel driver. The display panel driver includes a driving controller **200**, a gate driver **300**, a gamma reference voltage generator **400**, a data driver **500**, and an emission driver **600**.

[0167] The display panel **100** includes a plurality of pixel circuits.

[0168] In the present exemplary embodiment, the pixel circuit includes a first switching element TR1, a second switching element TR2, a third switching element TR3, a fourth switching element TR4, an organic light emitting element OL, and a capacitor CST.

[0169] The first switching element TR1 includes a control electrode, an input electrode, and an output electrode.

[0170] The second switching element TR2 includes a control electrode to which a first scan signal SCAN1 is applied, an input electrode to which a data voltage VD is applied, and an output electrode connected to the control electrode of the first switching element TR1.

[0171] The third switching element TR3 includes a control electrode to which an emission signal EM is applied, an input electrode connected to the output electrode of the first switching element TR1, and an output electrode connected to a first electrode of an organic light emitting element OL.

[0172] The fourth switching element TR4 includes a control electrode to which a second scan signal SCAN2 is applied, an input electrode to which the data voltage VD is applied, and an output electrode connected to the output electrode of the first switching element TR1.

[0173] The organic light emitting element OL includes the first electrode connected to the output electrode of the third switching element TR3 and a second electrode to which a low power voltage ELVSS is applied.

[0174] The capacitor CST includes a first end connected to the input electrode of the first switching element TR1 and a second end connected to the control electrode of the first switching element TR1.

[0175] In the present exemplary embodiment, the first to fourth switching elements TR1 to TR4 may be P-type transistors. For example, the first to fourth switching elements TR1 to TR5 may be polysilicon thin film transistors. For example, the first to fourth switching elements TR1 to TR5 may be low temperature polysilicon ("LTPS") thin film transistors.

[0176] The pixel circuit may further include a first switch SW1 connecting the input electrode of the second switching element TR2 and the data line DL and a second switch SW2 connecting the input electrode of the second switching element TR2 and a sensing line SL.

[0177] The pixel circuit may further include a third switch SW3 applying a high power voltage ELVDD to the input electrode of the first switching element TR1 and a fourth switch SW4 applying a reference voltage VREF to the input electrode of the first switching element TR1.

[0178] The high power voltage ELVDD is a power voltage to turn on the organic light emitting element OL. The reference voltage VREF is applied to the input electrode of the first switching element TR**1** when the pixel circuit is operated in the threshold voltage sensing mode. The reference voltage VREF may be less than the high power voltage ELVDD.

[0179] The pixel circuit may be operated in one of the threshold voltage sensing mode and the display mode.

[0180] During a first duration DU**1** of the threshold voltage sensing mode, the first scan signal SCAN**1**, the second scan signal SCAN**2**, a control signal S**1** of the first switch SW**1**, and a control signal S**4** of the fourth switch SW**4** may have an activation level and a control signal S**2** of the second switch SW**2**, and a control signal S**3** of the third switch SW**3** may have a deactivation level.

[0181] During a second duration DU**2** of the threshold voltage sensing mode, the first scan signal SCAN**1**, the second scan signal SCAN**2**, the control signal S**2** of the second switch SW**2**, and the control signal S**4** of the fourth switch SW**4** may have the activation level and the control signal S**1** of the first switch SW**1** and the control signal S**3** of the third switch SW**3** may have the deactivation level.

[0182] In the present exemplary embodiment, the first to fourth switching elements TR**1** to TR**4** may be P-type transistors so that the activation level of the first and second scan signals SCAN**1** and SCAN**2** may be a low level and the deactivation level of the first and second scan signals SCAN**1** and SCAN**2** may be a high level.

[0183] For example, the activation level of the control signal of the first to fourth switches SW**1** to SW**4** may be the high level and the deactivation level of the control signal of the first to fourth switches SW**1** to SW**4** may be the low level.

[0184] In the present exemplary embodiment, during the first duration DU**1** and the second duration DU**2** of the threshold voltage sensing mode, both of the first and second scan signals SCAN**1** and SCAN**2** may have the activation level. During the first duration DU**1** of the threshold voltage sensing mode, the data line DL applies the data voltage VD to the input electrode of the second switching element TR**2** through the first switch SW**1**. During the second duration DU**2** of the threshold voltage sensing mode, the sensing line SL is connected to the input electrode of the second switching element TR**2** to sense the threshold voltage Vth of the first switching element TR**1** through the sensing line SL.

[0185] In the present exemplary embodiment, during the second duration DU**2** of the threshold voltage sensing mode, the threshold voltage Vth of the first switching element TR**1** may be sensed based on the voltage of the input electrode GNODE of the second switching element TR**2** using the second switch SW**2** and the sensing line SL.

[0186] In the present exemplary embodiment, the length of the second duration DU**2** of the threshold voltage sensing mode may be longer than the length of the first duration DU**1** of the threshold voltage sensing mode.

[0187] The second scan signal SCAN**2**, the fourth switching element TR**4**, the second switch SW**2**, and the fourth switch SW**4** may be elements to sense the threshold voltage Vth of the first switching element TR**1**.

[0188] In the display mode, the second scan signal SCAN**2**, the control signal S**2** of the second switch SW**2**, and the control signal S**4** of the fourth switch SW**4** may maintain the deactivation level.

[0189] According to the exemplary embodiment, the threshold voltage Vth of the driving switching element TR**1** in the pixel circuit may be sensed and the threshold voltage Vth of the driving switching element TR**1** may be compensated. Thus, the luminance uniformity of the display panel **100** may be enhanced so that the display quality may be enhanced.

[0190] In addition, the elements compensating the threshold voltage Vth may not be included in the pixel circuit. The elements compensating the threshold voltage Vth may sense the threshold voltage Vth at an outside of the pixel circuit so that the number of the switching elements in the pixel circuit may be reduced. Thus, the manufacturing cost of the display panel **100** may be reduced.

[0191] According to the inventive concepts as explained above, the display quality of the display panel may be enhanced and the manufacturing cost of the display panel may be reduced.

[0192] Although certain exemplary embodiments and implementations have been described herein, other embodiments and modifications will be apparent from this description. Accordingly, the inventive concepts are not limited to such embodiments, but rather to the broader scope of the appended claims and various obvious modifications and equivalent arrangements as would be apparent to a person of ordinary skill in the art.

What is claimed is:

1. A pixel circuit of a display apparatus comprising:

a first switching element comprising a control electrode, an input electrode, and an output electrode;

a second switching element comprising a control electrode configured to receive a first scan signal, an input electrode configured to receive a data voltage, and an output electrode connected to the control electrode of the first switching element;

a third switching element comprising a control electrode configured to receive a second scan signal, an input electrode configured to receive an initialization voltage, and an output electrode connected to the output electrode of the first switching element;

a fourth switching element comprising a control electrode configured to receive an emission signal, an input electrode configured to receive a first power voltage, and an output electrode connected to the input electrode of the first switching element;

a fifth switching element comprising a control electrode configured to receive a third scan signal, an input electrode configured to receive the data voltage, and an output electrode connected to the input electrode of the first switching element;

an organic light emitting element comprising a first electrode connected to the output electrode of the first switching element and a second electrode configured to receive a second power voltage; and

a capacitor comprising a first end connected to the control electrode of the first switching element and a second end connected to the output electrode of the first switching element.

2. The pixel circuit of the display apparatus of claim **1**, wherein the first scan signal and the second scan signal are configured to have an activation level and the third scan signal is configured to have a deactivation level during a first duration of a threshold voltage sensing mode, and

wherein the first scan signal is configured to have the deactivation level and the second scan signal and the third scan signal are configured to have the activation level during a second duration of the threshold voltage sensing mode.

3. The pixel circuit of the display apparatus of claim **2**, wherein a threshold voltage of the first switching element is configured to be sensed using the third switching element and an initialization voltage applying line configured to apply the initialization voltage during the second duration of the threshold voltage sensing mode.

4. The pixel circuit of the display apparatus of claim **2**, wherein the first scan signal and the second scan signal are configured to have the activation level and the third scan signal is configured to have the deactivation level during a first duration of a display mode, and

wherein the first scan signal, the second scan signal, and the third scan signal are configured to have the deactivation level and the emission signal is configured to have the activation level during a second duration of the display mode.

5. The pixel circuit of the display apparatus of claim **1**, further comprising:

a first switch connecting the input electrode of the second switching element and a data line; and

a second switch connecting the input electrode of the second switching element and a sensing line.

6. The pixel circuit of the display apparatus of claim **5**, wherein the first scan signal, the second scan signal, the third scan signal, and a control signal of the first switch are configured to have an activation level and a control signal of the second switch is configured to have a deactivation level during a first duration of a threshold voltage sensing mode, and

wherein the first scan signal, the second scan signal, the third scan signal, and the control signal of the second switch are configured to have the activation level and the control signal of the first switch is configured to have the deactivation level during a second duration of the threshold voltage sensing mode.

7. The pixel circuit of the display apparatus of claim **6**, wherein a length of the second duration of the threshold voltage sensing mode is configured to be longer than a length of the first duration of the threshold voltage sensing mode.

8. The pixel circuit of the display apparatus of claim **6**, wherein a threshold voltage of the first switching element is configured to be sensed based on a voltage of the input electrode of the second switching element using the second switch and the sensing line during the second duration of the threshold voltage sensing mode.

9. The pixel circuit of the display apparatus of claim **6**, wherein the first scan signal, the second scan signal, and the control signal of the first switch are configured to have the activation level and the third scan signal and the control signal of the second switch are configured to have the deactivation level during a first duration of a display mode, and

wherein the first scan signal, the second scan signal, the third scan signal, and the control signal of the second switch are configured to have the deactivation level and the emission signal is configured to have the activation level during a second duration of the display mode.

10. The pixel circuit of the display apparatus of claim **1**, wherein the first to fifth switching elements are N-type transistors.

11. A pixel circuit of a display apparatus comprising:

a first switching element comprising a control electrode, an input electrode, and an output electrode;

a second switching element comprising a control electrode configured to receive a first scan signal, an input electrode configured to receive a data voltage, and an output electrode connected to the control electrode of the first switching element;

a third switching element comprising a control electrode configured to receive a second scan signal, an input electrode configured to receive an initialization voltage, and an output electrode connected to the output electrode of the first switching element;

a fourth switching element comprising a control electrode configured to receive an emission signal, an input electrode configured to receive a first power voltage, and an output electrode connected to the input electrode of the first switching element;

a fifth switching element comprising a control electrode configured to receive a third scan signal, an input electrode connected to the input electrode of the first switching element, and an output electrode connected to the control electrode of the first switching element;

an organic light emitting element comprising a first electrode connected to the output electrode of the first switching element and a second electrode configured to receive a second power voltage; and

a capacitor comprising a first end connected to the control electrode of the first switching element and a second end connected to the output electrode of the first switching element.

12. The pixel circuit of the display apparatus of claim **11**, further comprising:

a first switch connecting the input electrode of the second switching element and a data line; and

a second switch connecting the input electrode of the second switching element and a sensing line.

13. The pixel circuit of the display apparatus of claim **12**, wherein the first scan signal, the second scan signal, the third scan signal, and a control signal of the first switch are configured to have an activation level and a control signal of the second switch is configured to have a deactivation level during a first duration of a threshold voltage sensing mode, and

wherein the first scan signal, the second scan signal, the third scan signal, and the control signal of the second switch are configured to have the activation level, and the control signal of the first switch is configured to have the deactivation level during a second duration of the threshold voltage sensing mode.

14. The pixel circuit of the display apparatus of claim **13**, wherein a length of the second duration of the threshold voltage sensing mode is configured to be longer than a length of the first duration of the threshold voltage sensing mode.

15. The pixel circuit of the display apparatus of claim **13**, wherein the first scan signal, the second scan signal, and the control signal of the first switch are configured to have the activation level, and the third scan signal, the control signal

of the second switch, and the emission signal are configured to have the deactivation level during a first duration of a display mode, and

wherein the first scan signal, the second scan signal, the third scan signal, and the control signal of the second switch are configured to have the deactivation level, and the emission signal is configured to have the activation level during a second duration of the display mode.

16. A pixel circuit of a display apparatus comprising:

a first switching element comprising a control electrode, an input electrode, and an output electrode;

a second switching element comprising a control electrode configured to receive a first scan signal, an input electrode configured to receive a data voltage, and an output electrode connected to the control electrode of the first switching element;

a third switching element comprising a control electrode configured to receive an emission signal, an input electrode connected to the output electrode of the first switching element, and an output electrode connected to a first electrode of an organic light emitting element;

a fourth switching element comprising a control electrode configured to receive a second scan signal, an input electrode configured to receive the data voltage, and an output electrode connected to the output electrode of the first switching element;

the organic light emitting element comprising the first electrode connected to the output electrode of the third switching element and a second electrode which is configured to receive a low power voltage; and

a capacitor comprising a first end connected to the input electrode of the first switching element and a second end connected to the control electrode of the first switching element.

17. The pixel circuit of the display apparatus of claim **16**, further comprising:

a first switch configured to connect the input electrode of the second switching element and a data line; and

a second switch configured to connect the input electrode of the second switching element and a sensing line.

18. The pixel circuit of the display apparatus of claim **17**, further comprising:

a third switch configured to apply a high power voltage to the input electrode of the first switching element; and

a fourth switch configured to apply a reference voltage to the input electrode of the first switching element.

19. The pixel circuit of the display apparatus of claim **18**, wherein the first scan signal, the second scan signal, a control signal of the first switch, and a control signal of the fourth switch are configured to have an activation level, and a control signal of the second switch and a control signal of the third switch are configured to have a deactivation level during a first duration of a threshold voltage sensing mode, and

wherein the first scan signal, the second scan signal, the control signal of the second switch, and the control signal of the fourth switch are configured to have the activation level, and the control signal of the first switch and the control signal of the third switch are configured to have the deactivation level during a second duration of the threshold voltage sensing mode.

20. The pixel circuit of the display apparatus of claim **16**, wherein the first to fourth switching elements are P-type transistors.

* * * * *

专利名称(译)	显示装置的像素电路		
公开(公告)号	US20200160780A1	公开(公告)日	2020-05-21
申请号	US16/578848	申请日	2019-09-23
[标]申请(专利权)人(译)	三星显示有限公司		
申请(专利权)人(译)	三星DISPLAY CO.，LTD.		
当前申请(专利权)人(译)	三星DISPLAY CO.，LTD.		
[标]发明人	KIM JIWOONG KWON OHJO		
发明人	KIM, JIWOONG KWON, OHJO		
IPC分类号	G09G3/325 G09G3/3291		
CPC分类号	G09G3/325 G09G3/3291 G09G2310/0264 G09G3/3233 G09G3/3266 G09G2300/0819 G09G2300/0842 G09G2300/0861 G09G2310/0251 G09G2320/0233 G09G2320/0295 G09G2320/043		
优先权	10-2018-014432611 2018-11-21 KR		
外部链接	Espacenet USPTO		

摘要(译)
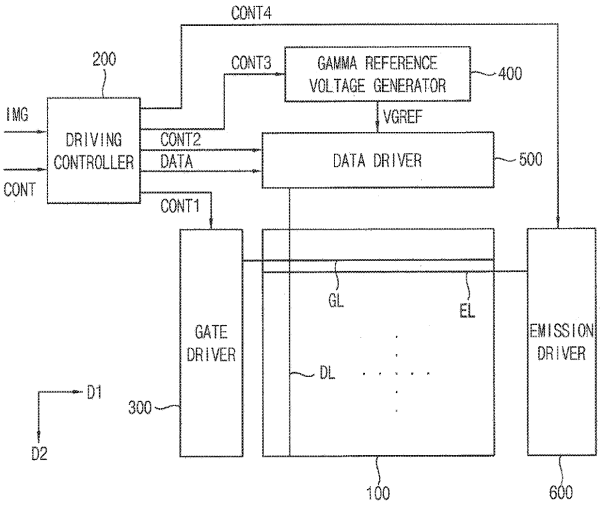
像素电路包括第一至第五晶体管，有机发光元件和电容器。 第二晶体管包括：控制电极，其接收第一扫描信号；输入电极，其接收数据电压；以及输出电极，其连接至第一晶体管的控制电极。 第三晶体管包括：接收第二扫描信号的控制电极；接收初始化电压的输入电极；和连接至第一晶体管的输出电极的输出电极。 第四晶体管包括：控制电极，其接收发射信号；输入电极，其接收第一电源电压；以及输出电极，其连接至第一晶体管的输入电极。 第五晶体管包括：控制电极，其接收第三扫描信号；输入电极，其接收数据电压；以及输出电极，其连接至第一晶体管的输入电极。